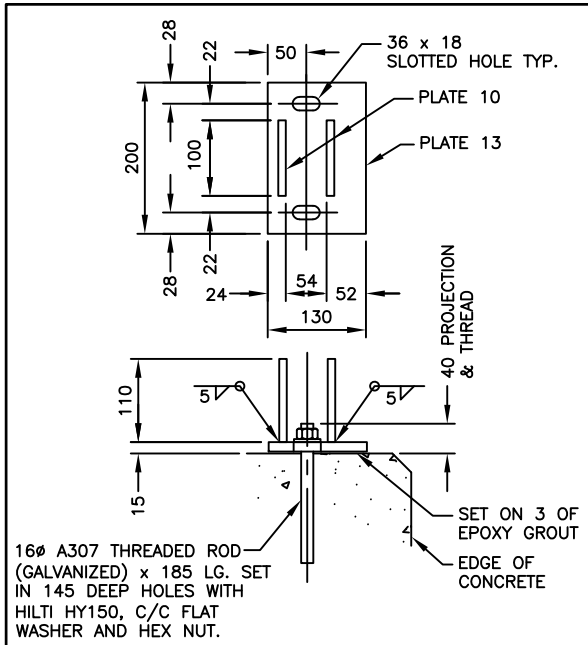

TYPICAL RAIL BRACKET AND ANCHOR DETAIL

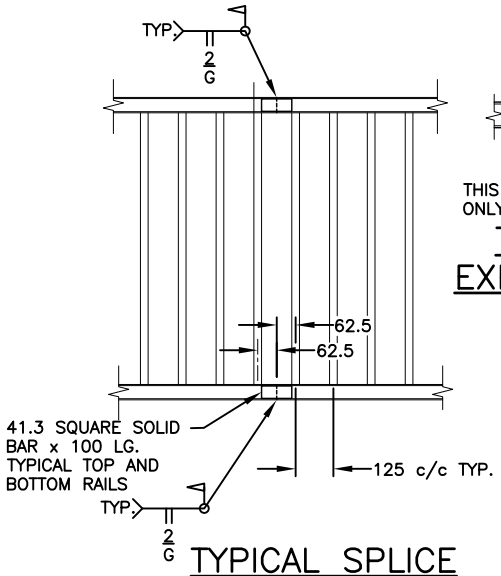

TYPICAL SPLICE DETAIL

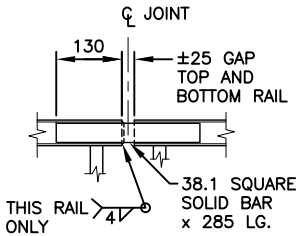

TYPICAL RAIL EXPANSION JOINT DETAIL

NOTES:

1. HSS TO CONFORM TO CSA G40.21 GRADE 350W, CLASS C.
2. PLATE TO CONFORM TO CSA G40.21 GRADE 300W.
3. FABRICATION TO CONFORM TO C.I.S.C. CODE OF STANDARD PRACTICE.
4. WELDING TO CONFORM TO CSA W59.
5. RAIL, BRACKETS AND ANCHOR BOLTS SHALL BE GALVANIZED IN ACCORDANCE WITH CSA G164,TABLE 1 IN ACCORDANCE WITH THE MANUFACTURER'S RECOMMENDATIONS.
6. ANCHOR BOLTS SHALL BE INSTALLED IN NEATLY DRILLED HOLES IN ACCORDANCE WITH MANUFACTURER'S RECOMMENDATIONS.
7. RAILS SHALL BE FITTED TRUE AND PLUMB PRIOR TO FIELD WELDING TO BRACKETS. POSTS AND PICKETS SHALL BE VERTICAL. TOP AND BOTTOM RAILS SHALL BE PARALLEL.
8. TOP RAILS SHALL BE FREE OF SHARP EDGES AND FINISHED SMOOTHLY.
9. EXPANSION JOINTS TO BE LOCATED TO MATCH JOINTS IN SUPPORTING STRUCTURE. MAXIMUM SPACING 6000. MINIMUM THREE RAIL BRACKETS BETWEEN EXPANSION JOINTS.
10. MINIMUM LENGTH OF RAW MATERIAL FOR RAILS NOT LESS THAN 4000 FOR PEDESTRIAN RAIL AND 3000 FOR BICYCLE RAIL.

NOTES ON USE:

1. STANDARD RAIL IS DESIGNED IN ACCORDANCE WITH CSA S6 'CANADIAN HWY BRIDGE DESIGN CODE'. FOR STRUCTURES GOVERNED BY PROVISIONS OF BRITISH COLUMBIA BUILDING CODE, OTHER CRITERIA MAY GOVERN.
2. STANDARD PEDESTRIAN RAIL IS INTENDED TO PROVIDE PROTECTION TO PEDESTRIANS AGAINST A FALL HAZARD WHERE THERE IS AN ELEVATED WALKWAY OR PEDESTRIAN ACCESS TO THE TOPSIDE OF A RETAINING WALL. SUCH PROTECTION IS REQUIRED WHERE THE FALL HAZARD EXCEEDS 600. STANDARD PEDESTRIAN RAIL MAY ALSO BE USED TO CHANNEL, SEPARATE OR RESTRICT PEDESTRIAN ACCESS AND FLOW WHERE NO FALL HAZARD EXISTS.
3. STANDARD BICYCLE RAIL IS INTENDED TO PROVIDE PROTECTION TO PEDESTRIANS AND CYCLISTS AGAINST A FALL HAZARD WHERE THERE IS AN ELEVATED WALKWAY OR PEDESTRIAN AND BICYCLE ACCESS TO THE TOPSIDE OF A RETAINING WALL. SUCH PROTECTION IS REQUIRED WHERE THE FALL HAZARD EXCEEDS 600. STANDARD BICYCLE RAIL MAY ALSO BE USED TO CHANNEL, SEPARATE OR RESTRICT PEDESTRIAN AND BICYCLE ACCESS AND FLOW WHERE NO FALL HAZARD EXISTS.
4. STANDARD RAIL IS NOT INTENDED TO PROVIDE PROTECTION TO VEHICLE TRAFFIC AGAINST A FALL HAZARD RESULTING FROM COLLISION OR TO PROTECT PEDESTRIAN/BICYCLE TRAFFIC FROM A MOTOR VEHICLE COLLISION, ALTHOUGH IT MAY BE USED TO RESTRICT PEDESTRIAN/BICYCLE ACCESS TO A ROADWAY OR PREVENT PEDESTRIANS/CYCLISTS FROM FALLING ONTO A ROADWAY.
5. STANDARD RAIL IS RATED FOR A HORIZONTAL LOAD OF 1.2 kN/m.
6. AS DESIGNED, RAIL MAY BE INSTALLED ON REINFORCED CONCRETE WALLS EXCEEDING 200 THICK PROVIDED COMPRESSIVE STRENGTH OF CONCRETE IS AT LEAST 25 MPa. FOR OTHER APPLICATIONS, INCLUDING ELEVATED SLABS, THE ANCHORAGE INTO AND CAPACITY OF THE SUPPORTING STRUCTURE MUST BE ASSESSED BY A PROFESSIONAL ENGINEER.

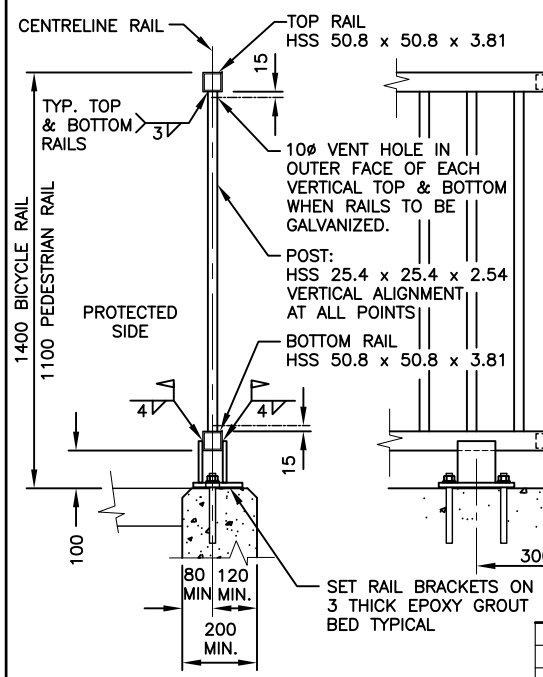

RAIL DETAIL

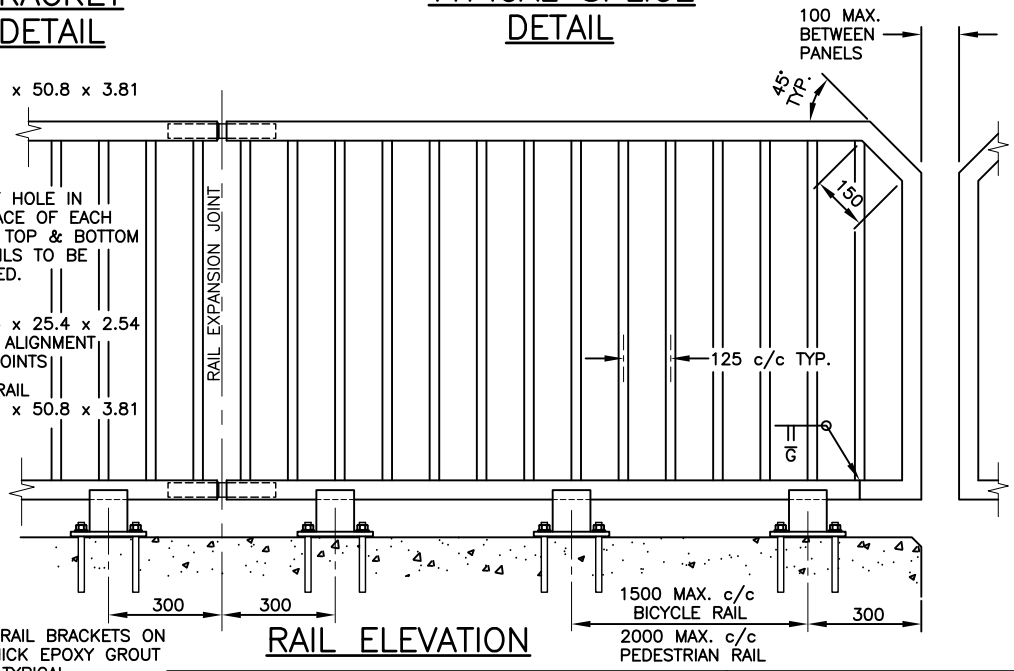

RAIL ELEVATION

NOT TO SCALE

No.	DATE	REVISION DESCRIPTION	BY	APP
3	FEB2022	REVIEWED AND UPDATED 2022	IP	JDh
2	FEB2019	REVIEWED AND UPDATED 2019	DAR	JDh

HANDRAIL ON CONCRETE RETAINING WALL

Kamloops
Canada's Tournament Capital

REV. 3

DWG. No. SC14